E26822

Upgrade Guide

Disclaimer

ASUS is not responsible for direct, indirect, intentional or unintentional damages resulting from improper installation and operation.

Safety precautions

- Before handling components, use a grounded wrist strap or touch a safely grounded object to avoid damaging them due to static electricity.
- Keep liquids or moisture away from your device to avoid short circuits.
- Remove rings, watches, and any other metal objects from your hands.
- Hold components by the edges to avoid touching the ICs.
- Properly install all components before connecting the AC power.
- Do not use power adapters or batteries from other devices to reduce the risk of injury to persons due to fire or explosion. Use only certified power adapters or batteries supplied by the manufacturer or authorized retailers.
- Detach all clips or flaps before removing cables to prevent damage.

- Disconnect cables, connectors, and power plugs by pulling the plug evenly to avoid damage.
- Use the correct screw models on your device to prevent damage.
- Confirm that the cable orientation is correct before connecting any cables.
- Fully remove all adhesive residue after removing and before installing any components.
- Photograph the appearance of cables, cable routing, connectors, and screws for later reference before proceeding with each step.

Pre-repair checklist

- Read the entire manual before starting any service procedures and follow all instructions.
- Back up the data on your device.
- Place your device on a clean and stable surface.
- Turn off your device.
- Disconnect all connected peripherals and cables.
- Disconnect all power cables and remove the battery pack (if applicable).

IMPORTANT!

- If you are uncertain about performing the described service procedures, stop and contact an authorized service center for assistance.
- Purchase replacement components from authorized retailers of this device to ensure maximum compatibility and reliability.

NOTE:

- The illustrations are for reference only.
- The service procedures described in this manual depend on the model configuration and may not reflect the entire servicing process. To service components that are not covered in this manual, please visit an authorized service center for further assistance.
- Keep all adhesive tape, insulating materials, screws, and other removable items in a safe place until the service procedure is completed, as they may be needed during installation.

Repair tools

Screwdriver

Plastic blade

Tweezers

Diagnostic tools

Use ASUS System Diagnostics after completing any service procedures to ensure that all components are working properly.

For more information, visit www.asus.com/support/FAQ/1048490/.

Bottom cover

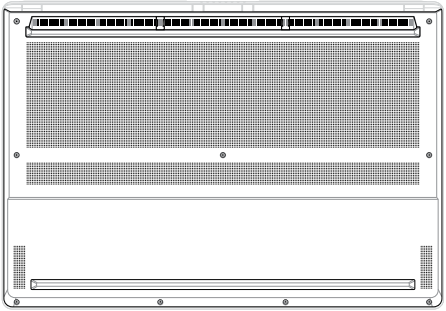

Before you begin

Read the **Safety Precautions** and complete the **Pre-repair Checklist**.

Screw list

- M2.0 X 8L (5pcs)
- M2.0 X 5.0L (5pcs)
- M2.0 X 6.5L (1pc Pop-open Screw)

Removal

IMPORTANT! System power will be cut off automatically upon removal of the bottom cover. To restore power, reattach the bottom cover securely and connect the AC power adapter to your Notebook PC after the servicing is complete.

1. Remove the screw cover(s) to expose the screw(s) underneath.
2. Remove the screw(s) from the bottom cover.
3. Loosen the Pop-open Screw without removing the screw from the cover.

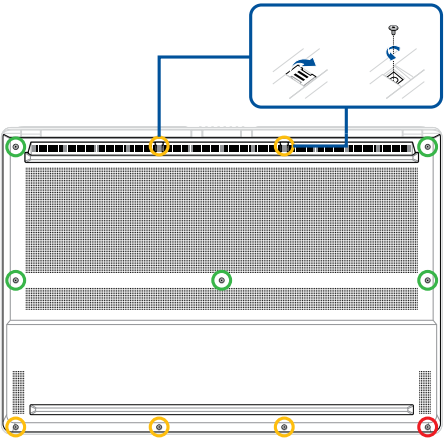

4. Use the plastic blade to pry open the indicated area of the bottom cover as shown in the illustration below.

5. Remove the bottom cover.

IMPORTANT! Avoid sliding the plastic blade along the side of your device or air vents to prevent damage.

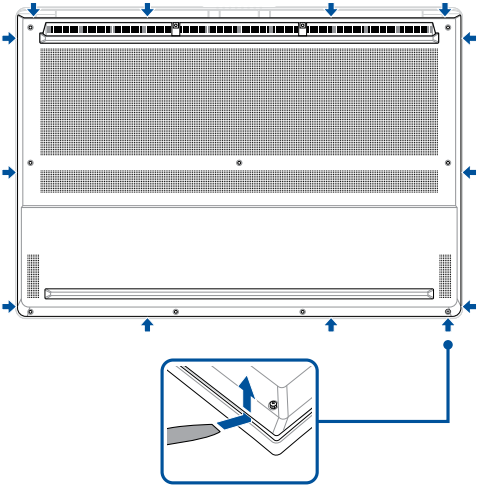

Installation

IMPORTANT! System power will be cut off automatically upon removal of the bottom cover. To restore power, reattach the bottom cover securely and connect the AC power adapter to your Notebook PC after the servicing is complete.

1. Install the bottom cover.
2. Gently press down on the bottom cover until it clicks into place.

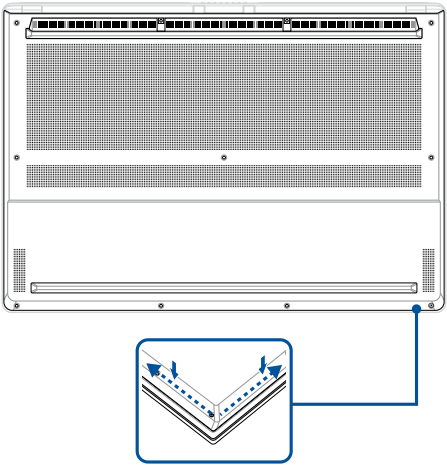

3. Secure the bottom cover using the screw(s) you removed earlier.

4. Tighten the Pop-open Screw.

5. Align and put the screw cover(s) in place.

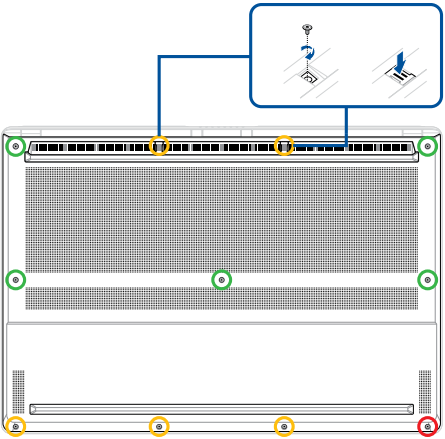

Battery

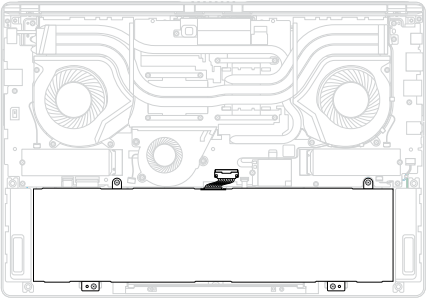

Before you begin

1. Read the **Safety Precautions** and **Pre-repair Checklist**.
2. Remove the bottom cover.

Screw list

- ⊕ M2.0 X 4.0L (4pcs)

Removal

1. Remove the polyester film.

GU606AX

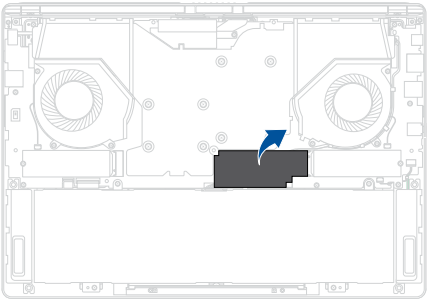

GU606AP

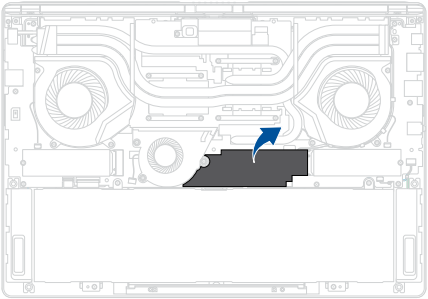

2. Disconnect the battery power cable.

IMPORTANT!

- Disconnect the battery power cable by lifting the side with the red wires first.
- Serious risk of fire or explosion may occur if the battery is punctured. If you are uncertain about proceeding, stop and contact an authorized service center for assistance.

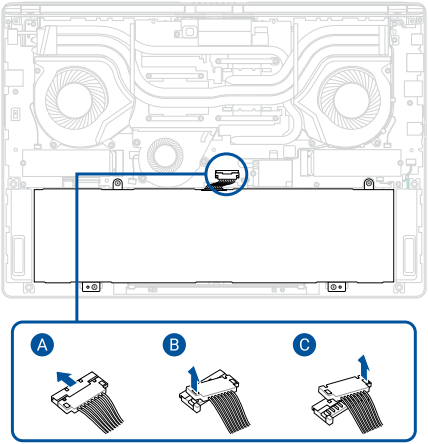

3. Remove the screw(s) from the battery.

4. Remove the battery.

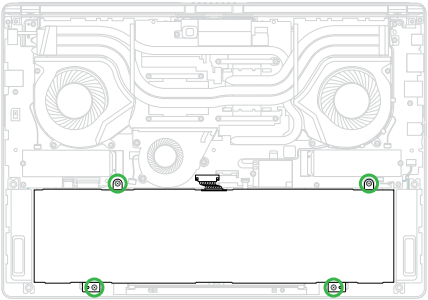

5. Remove the battery power cable.

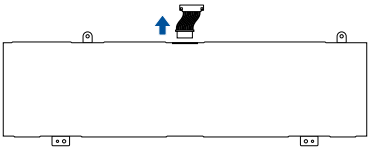

Installation

1. Connect the battery power cable to the battery.

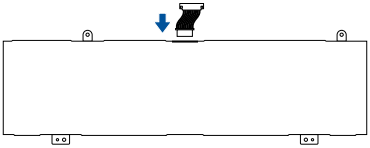

2. Install the battery.
3. Secure the battery using the screw(s) you removed earlier.

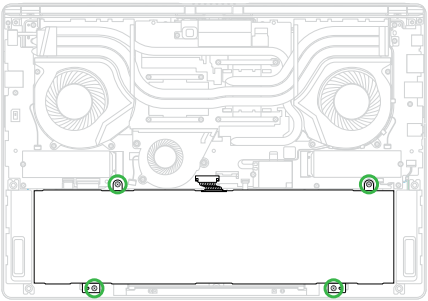

4. Reconnect the battery power cable.

IMPORTANT! Connect the side of the battery power cable with the black wires first.

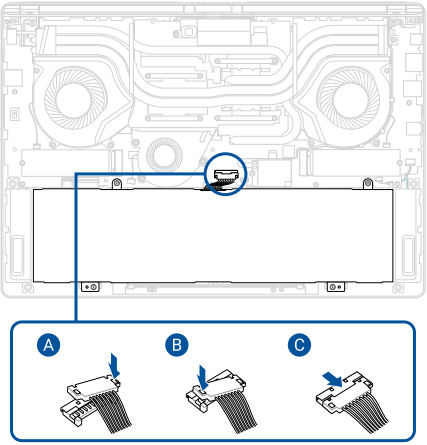

5. Align and attach the polyester film.
6. Install the components you removed in the *Before you begin* section.

GU606AX

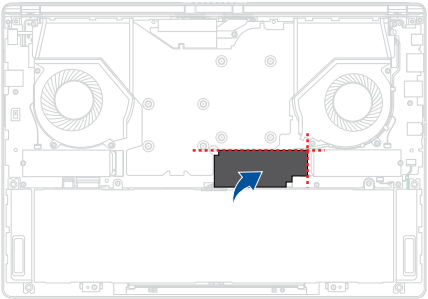

GU606AP

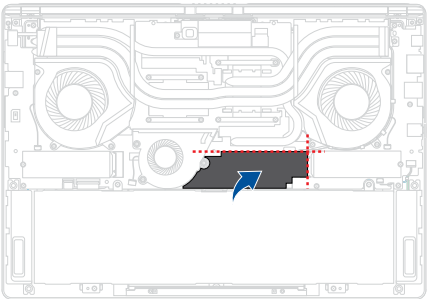

M.2 SSD module

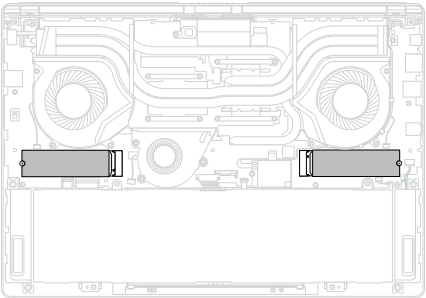

Before you begin

WARNING! Use only a PH1 screwdriver for the screws specified in this section. An incorrect screwdriver size or improper tool can slip and strip the screw head, resulting in damage to the screw and adjacent components.

IMPORTANT! Thermal paste, thermal pads, liquid metal, or other thermal interface materials must be thoroughly removed and replaced if this component is removed. Ensure that replacement materials are available before proceeding, or contact an authorized service center for assistance.

1. Read the **Safety Precautions** and **Pre-repair Checklist**.
2. Remove the bottom cover and disconnect the battery power cable.

Screw list

- ⊕ M2.0 X 2.0L (2pcs)

Removal

1. Remove the tape (if available) and remove the screw(s).
2. Remove the M.2 SSD module(s) from the motherboard.

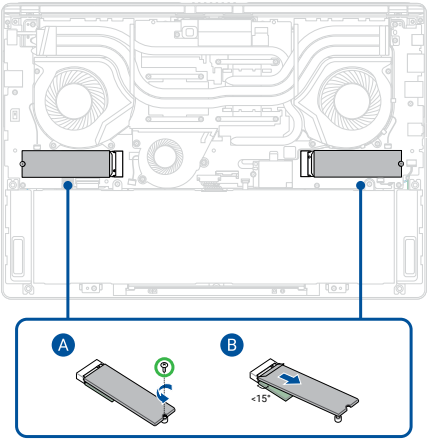

3. Remove the aluminum foil sleeve.

4. Remove the absorber sheet(s) from both sides of the M.2 SSD module(s).

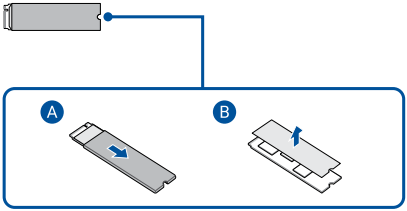

5. Remove the thermal pad(s) from the motherboard.

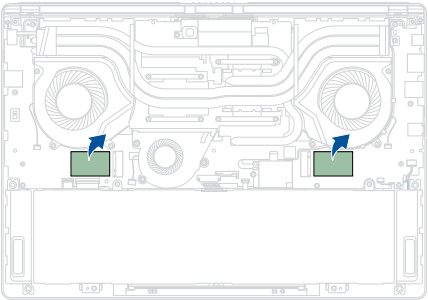

Installation

1. Install the thermal pad(s) on the motherboard.

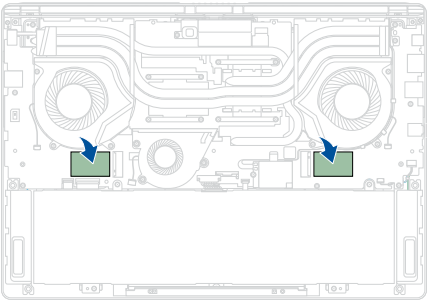

2. Attach the absorber sheet(s) to both sides of the M.2 SSD module(s).

3. Insert the M.2 SSD module(s) into the aluminum foil sleeve.

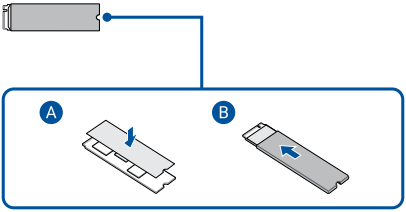

4. Align and insert the M.2 SSD module(s) into the M.2 connector(s), and secure the M.2 SSD module(s) to the motherboard using the screw(s) you removed earlier.

5. Align and reattach the tape (if available).
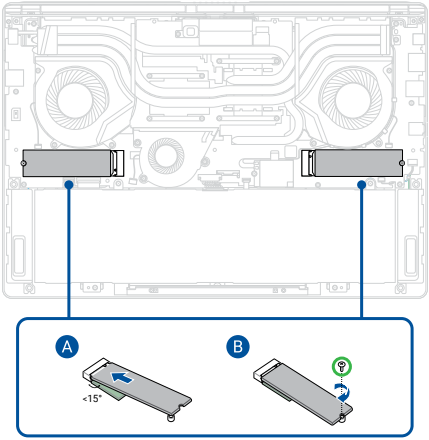
6. Install the components you removed in the *Before you begin* section.